Terminal

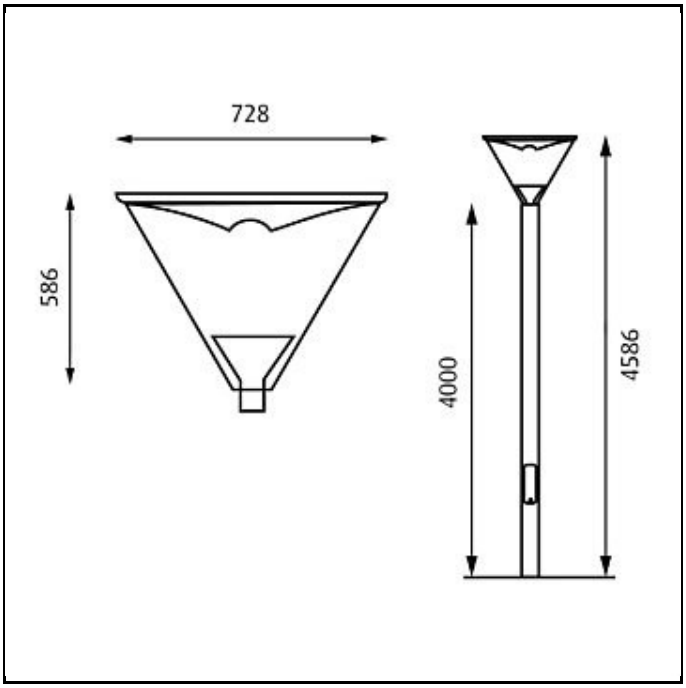

Design Jens Ammundsen, Vilhelm Lauritzen A/S & Jens Gudum, Jens Gudum ApS

Concept The fixture provides an indirect and soft illumination. The choice and placement of a point light source ensures that the narrow beam illumination is been redirected by the small reflector optic in the center of the top shade. This has been carefully designed in three variants to provide either symmetric, oval or forward throw distribution.

Finish Aluminium coloured with textured surface or graphite with textured surface, powder coated.

Material Top shade: Dark grey or light grey, aluminium. Reflector: Anodised aluminium and white painted aluminium. Bottom reflector: Spun aluminium. Enclosure: Vacuum formed clear polycarbonate. Base: Die cast aluminium.

Mounting Pole dimension: Ø 115mm. Terminal block: 1x3x2,5mm² (Class I) or 1x2x2,5mm² (Class II). Terminal block positioning: Under the fixturehead console. Ballast positioning: Upper Poletop.

Weight Max. 8kg.

Class Ingress protection IP66. Electric shock protection I w. ground, II w/o ground. IK08.

Product Code	Light source	Finish	Class	Light technique
TER-PT	1x150W HIT G12 HF	ALU COL TEXT	I	ASYM PARK
	1x70W HIT G12 HF	GRAPH TEXT	II	ASYM STREET
				ROT SYM

Info notes

There are three different reflectors, rotation symmetric, asymmetric street and asymmetric parc. Designed for a standard steel pole Ø 114.3mm with a wall thickness of 3.2mm (DIN 24 58-1626). Aluminium poles Ø 115mm can be ordered as accessory parts. Terminal/fuse box is not supplied together with the accessory aluminium poles and must be ordered separately. Mounting: for pole Ø 115 mm.

louis poulsen